RANGER-AT™ POOL LIFT

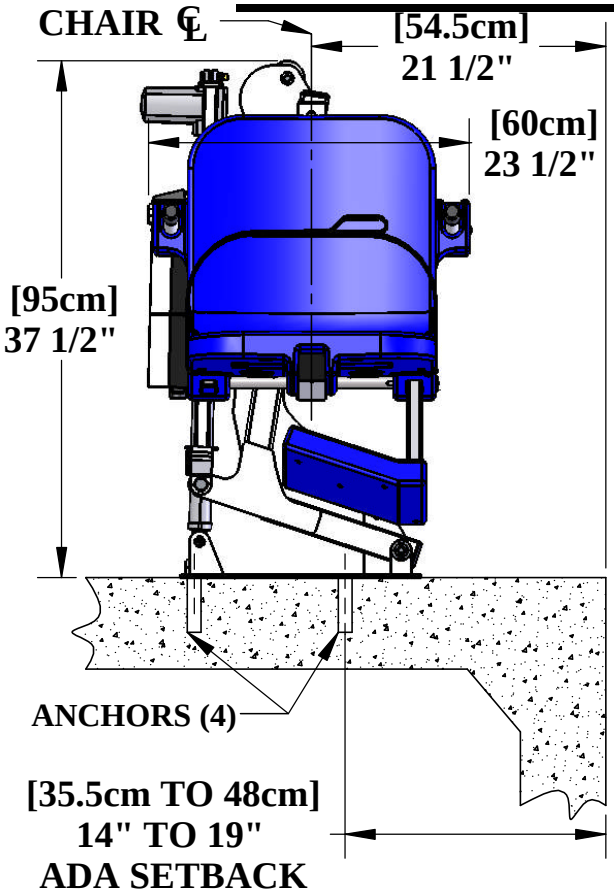

FRONT VIEW

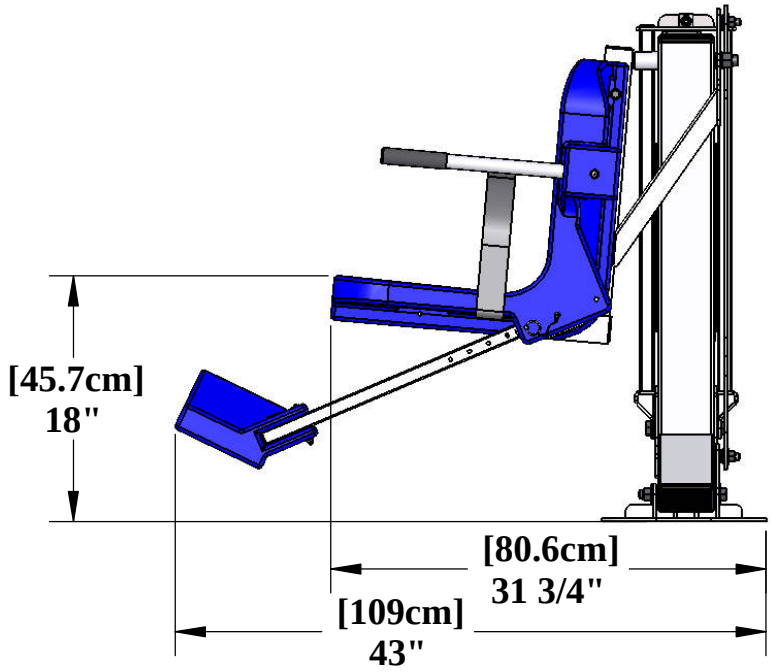

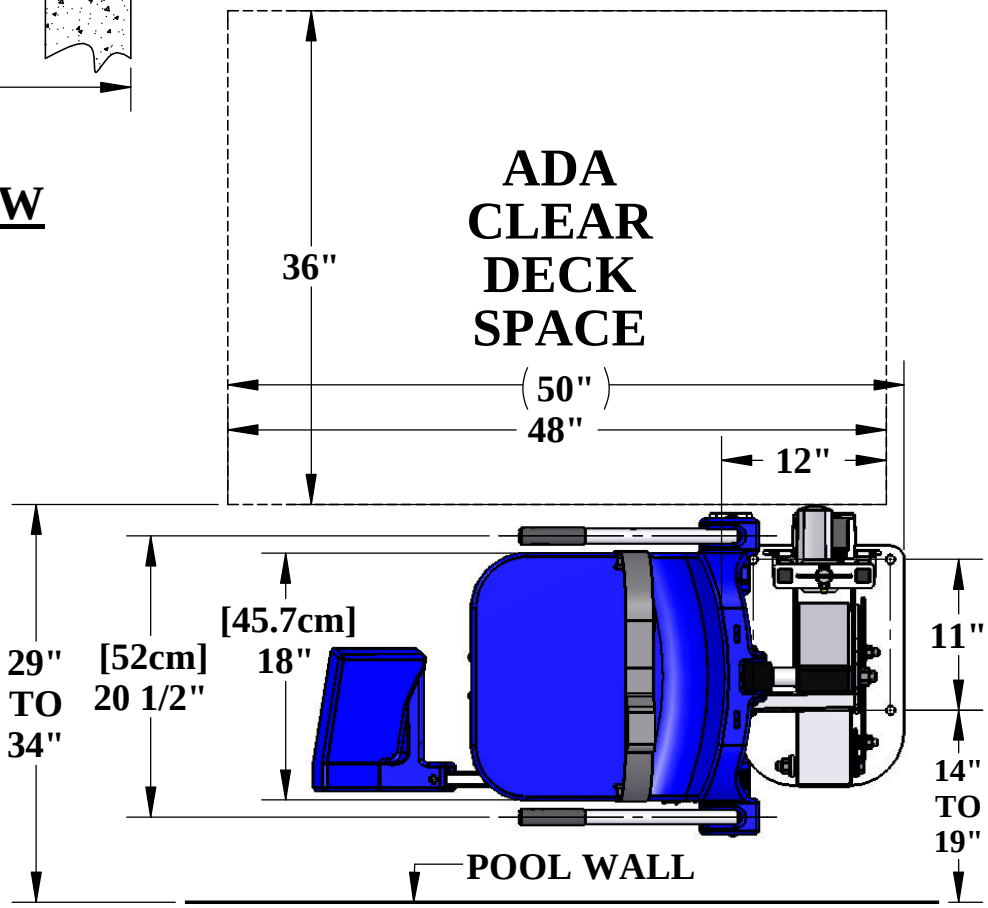

Inspected And Verified To Meet Applicable Sections of ADA Guidelines Section 1009.2 By

wyle laboratories

A Registered ISO 9001 Laboratory

CE

Aqua Creek Products

The Total Solution for Pool and Spa Access

9889 GARRYMORE LANE
MISSOULA, MT 59808
(406) 549-0769
FAX (406) 549-2602

NOTE:

*SPECIFICATIONS ARE SUBJECT TO CHANGE WITHOUT NOTICE

PRODUCT:	F-411RPL-AT1		
DWG #:	F-411RPL-AT1-1		
SCALE:	1:14	DATE:	2/8/12
DRAWN BY:	DS	REVISION:	A

RANGER-AT™ LIFT

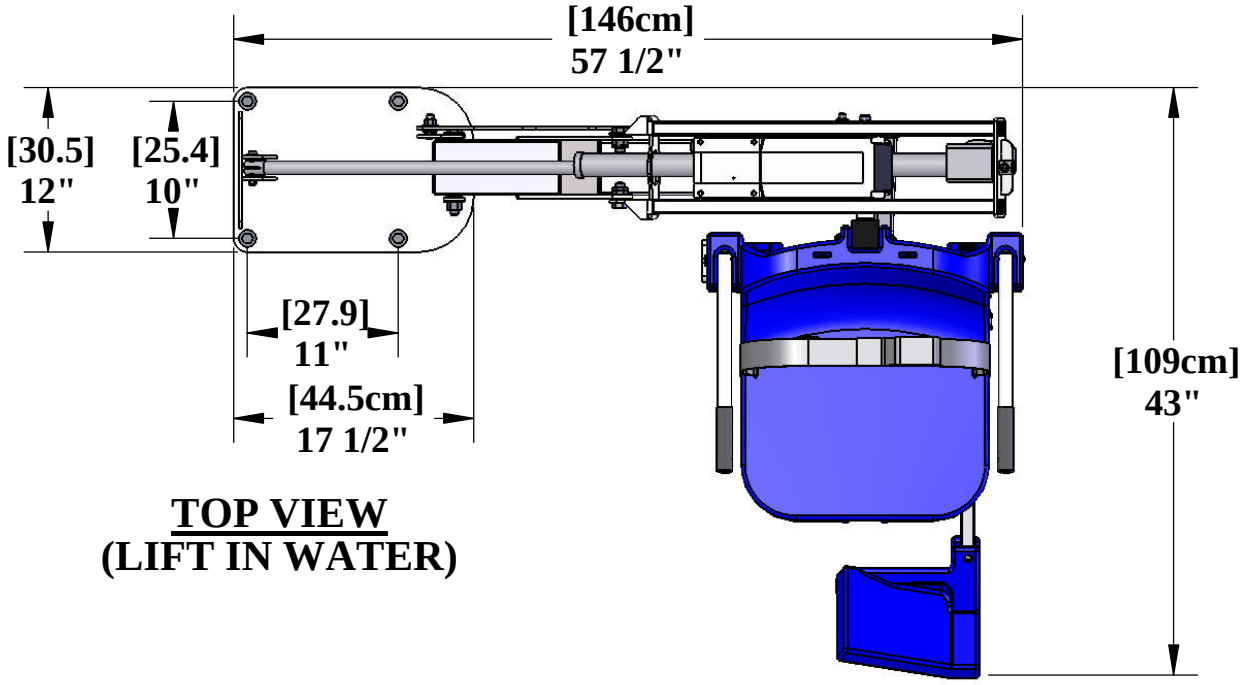

TOP VIEW
(LIFT IN WATER)

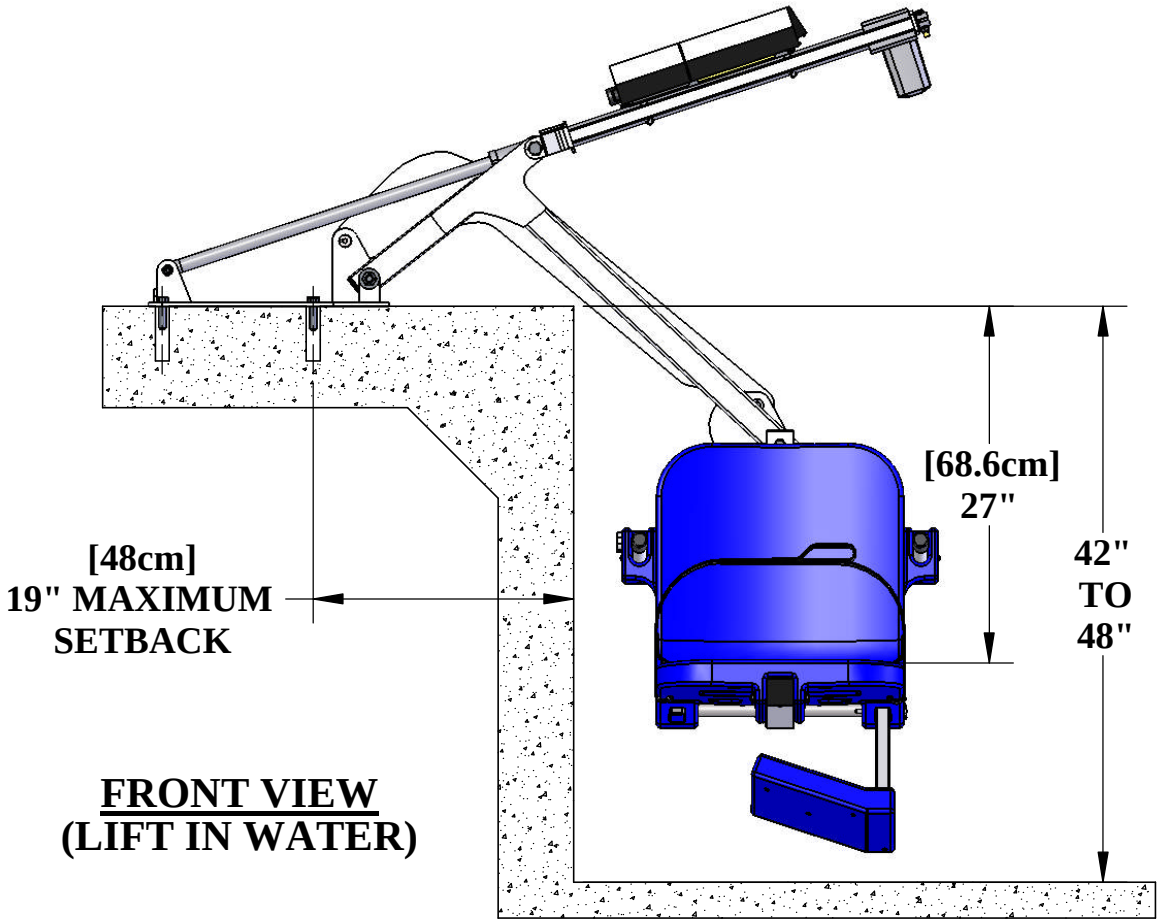

FRONT VIEW
(LIFT IN WATER)

Aqua Creek Products
The Total Solution for Pool and Spa Access

9889 GARRYMORE LANE
MISSOULA, MT 59808
(406) 549-0769
FAX (406) 549-2602

NOTE:
*SPECIFICATIONS ARE SUBJECT TO CHANGE WITHOUT NOTICE

PRODUCT:	F-411RPL-AT1		
DWG #:	F-411RPL-AT1-2		
SCALE:	1:14	DATE:	2/8/12
DRAWN BY:	DS	REVISION:	A

RANGER-AT™ LIFT

SPECIFICATIONS:

LIFTING CAPACITY: 350 lbs [159 kg]
STATIC LOAD CAPACITY: 525 lbs [238 kg]

MAX. DRAFT (DECK TO WATER): 9.0" [229mm]
MAX. SETBACK (SEE PAGE 2): 19" [483mm]

OVERALL HEIGHT (MAX): 37-1/2" [953mm]
MAX. WIDTH (DEPLOYED): 43" [109cm]
MAX. LENGTH (DEPLOYED): 57-1/2" [146cm]
STOWED LENGTH (MAX): 23-1/2" [60cm]
STOWED WIDTH (NO FOOTREST): 31-3/4" [81cm]

WEIGHT: 130lbs [59kg]

MATERIALS:

LIFT FRAME: TYPE 304 STAINLESS STEEL
BASEPLATE: TYPE 304 STAINLESS STEEL
CHAIR & FOOTREST: LLDPE POLYETHYLENE
SAFETY BELT: HEAVY-DUTY POLYESTER STRAP, HOOK & LOOP FASTENER
POWDER COATING: EPOXY, APPLIANCE WHITE

STANDARD EQUIPMENT:

DUAL FLIP-UP ARMRESTS
FLIP-UP FOOTREST
SAFETY BELT
24VDC BATTERY & CHARGER
WATERPROOF HANDSET-REMOTE

AVAILABLE OPTIONS:

4-PT ANCHOR KIT:	**(PN: F-04CAJP)**
HEADREST ASSEMBLY	**(PN: F-422PLH)**
PULLOUT LEGREST:	**(PN: F-105LAR)**
COVER, POLYESTER	**(PN: F-422PPC)**
OVERHEAD THERAPY BAR	**(PN: F-414OHB)**

Inspected And Verified To Meet Applicable Sections of ADA Guidelines Section 1009.2 By

wyle laboratories

A Registered ISO 9001 Laboratory

CE

Aqua Creek Products

The Total Solution for Pool and Spa Access

9889 GARRYMORE LANE
MISSOULA, MT 59808
(406) 549-0769
FAX (406) 549-2602

NOTE:

*SPECIFICATIONS ARE SUBJECT TO CHANGE WITHOUT NOTICE

PRODUCT:	F-411RPL-AT1		
DWG #:	F-411-RPL-AT1-3		
SCALE:	1:24	DATE:	2/9/12
DRAWN BY:	DS	REVISION:	A